DATA SHEET – DIMENSIONS

13601: MINI HYDRAULIC POWER-PACK UNIT 380V AC (4 KW) - 8 CC - 12 LIT/MIN - TANK 40 LIT

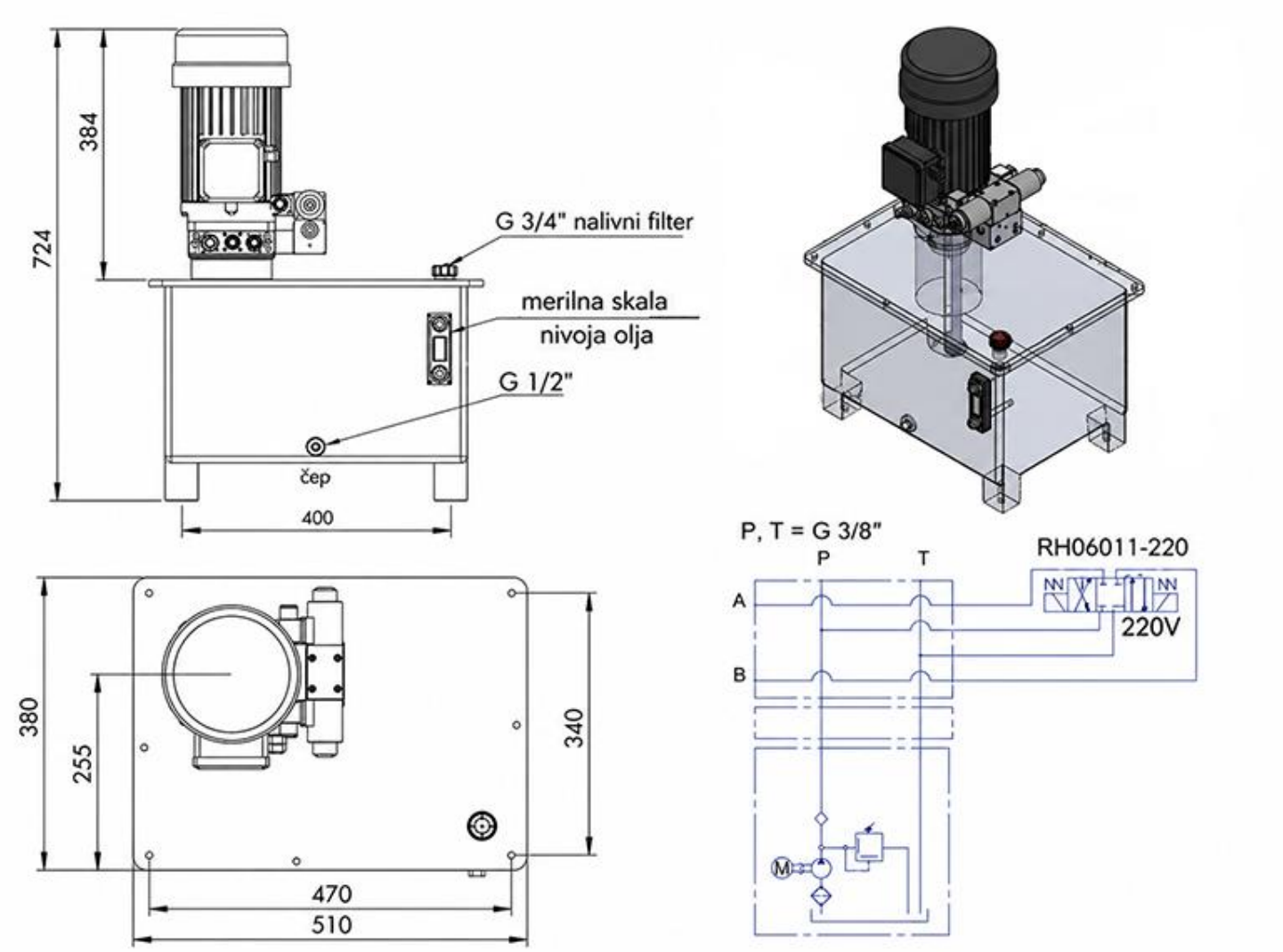

CODE	VOLTAGE (V)	MOTOR POWER (kW)	MAX. PRESSURE (bar)	PUMP FLOW (cc)	OIL TANK CAPACITY (l)	FLOW OF POWER PACK (lit/min)	SPEED (rpm)
13601	380	4	120	8	40	12	1500
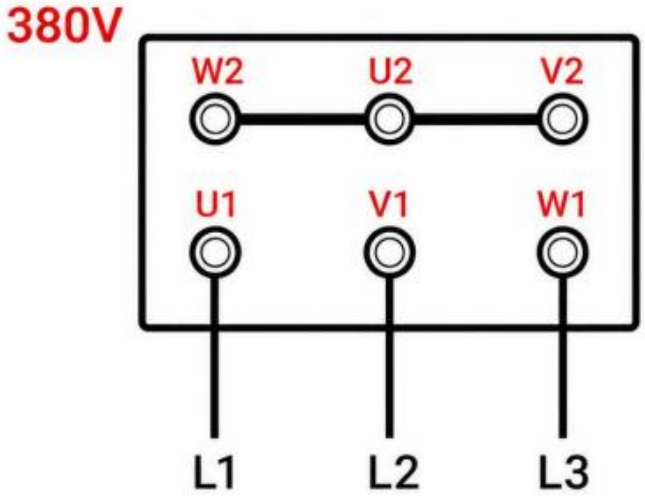
VEZANA SHEMA: